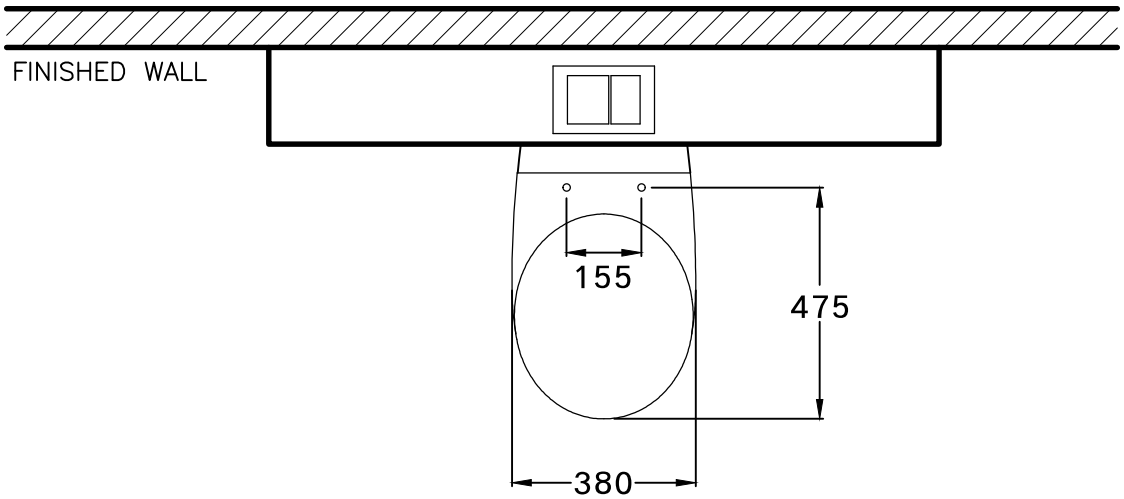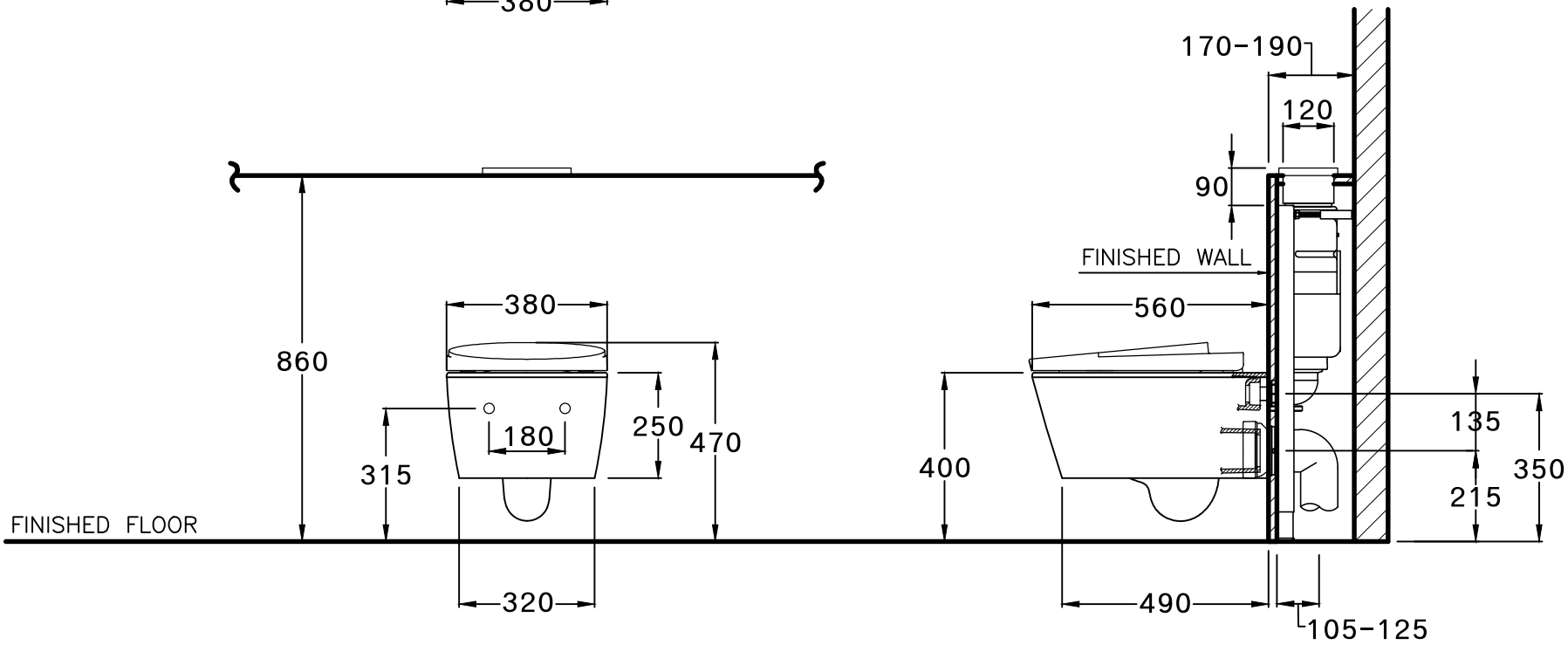CATALOG DRAWING	
CODE	C-19517(T)
MODEL	Oval WH.Wc.(Conceal Tank 3/4.5 L.)
SEAT	C-9128
ISSUE	30/01/62